STANDARD PFA CONFIGURATIONS

Model 255 clamps are designed for 3/4" T-Slots and Model 259 for 1" T-Slots. The part number references the "bolt length", which is not the clamping height, but rather the complete length of the bolt. The charts show nominal clamping height for standard T-Slots. The bolt length can be selected for the part number below.

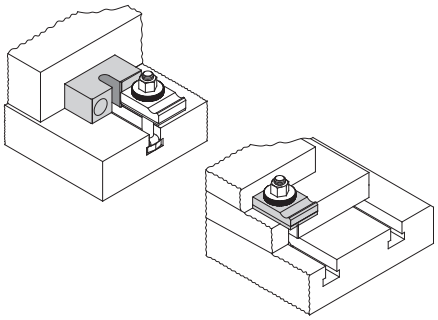

Model 255 TSB Nominal Clamp Height**	Clamp Range B* (Standard 3/4" Slot)		A+B*		C	D	E
	Min	Max	Min	Max			
0 - 1	0"	1.125"	.75"	2.0"	2.0"	2.5"	4.0"
1 - 2	.875"	2.125"	1.75"	3.0"		2.5"	5.0"
2 - 3	1.875"	3.125"	2.75"	4.0"		2.5"	6.0"
2 1/2 - 4	2.375"	4.125"	3.25"	5.0"		3.0"	7.0"
3 - 5	2.875"	5.125"	3.75"	6.0"		3.5"	8.0"
3 1/2 - 6	3.375"	6.125"	4.25"	7.0"		4.0"	9.0"

Model 259 TSB Nominal Clamp Height**	Clamp Range B* (Standard 1" Slot)		A+B*		C	D	E
	Min	Max	Min	Max			
0 - 1/2	0"	.6"	.75"	1.6"	2.4"	2.5"	4.0"
3/4 - 1 1/2	.75"	1.6"	1.75"	2.6"		2.5"	5.0"
1 3/4 - 2 1/2	1.75"	2.6"	2.75"	3.6"		2.5"	6.0"
2 1/4 - 3 1/2	2.25"	3.6"	3.25"	4.6"		3.0"	7.0"
2 3/4 - 4 1/2	2.75"	4.6"	3.75"	5.6"		3.5"	8.0"
3 1/4 - 5 1/2	3.25"	5.6"	4.25"	6.6"		4.0"	9.0"

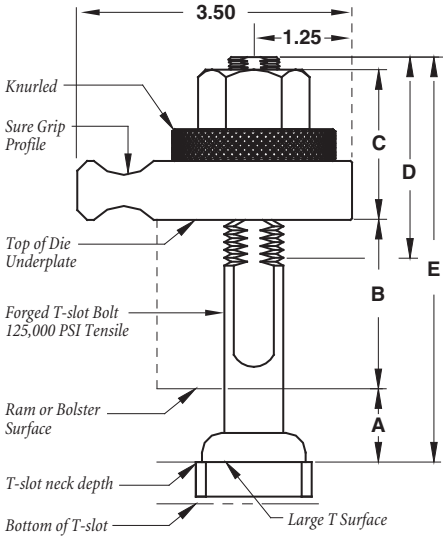

DIMENSIONS ARE IN INCHES

* T-Slot neck height (dimension A) is assumed to be .875" for 3/4" slots and 1" for 1" slot.

** TSL Style with retaining ring incure a 1/4" reduction in maximum clamp height.

Suffix - STN may replace - TSB if fully threaded stock and T-Nut is cleared for no minimum clamping heights. Maximum clamping height for STN is calculated as follows:

Model 255 B_{MAX} = E - 3.25
Model 259 B_{MAX} = E - 4.00

Example:

Clamp Style	Model Number		Bolt Length	Bolt Style	Heel Block Option
MC	*255 (3/4" T-Slot)* *259 (1" T-Slot)*	*Free Rotation (FRA)* *Anti-Rotation (ARA)*	*E*	*TSB (std.), TSL or STN*	*HBX.XXX*
MC	259	ARA	5.0	TSB	

Part No: **MC-259ARA5.0TSB**

pfa-inc.com